ALBA

MHTIMYPL80

1	2	3
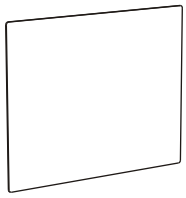	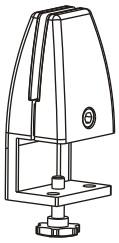	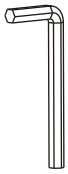
x1	x2	x1

1

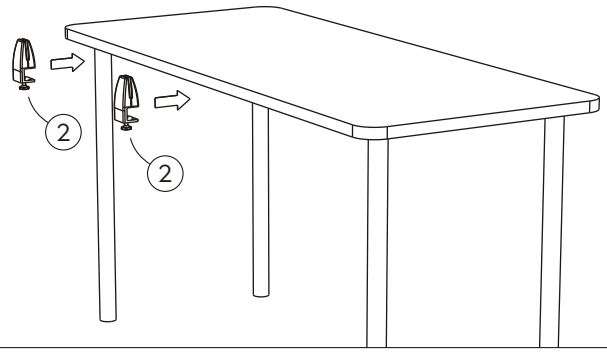

2

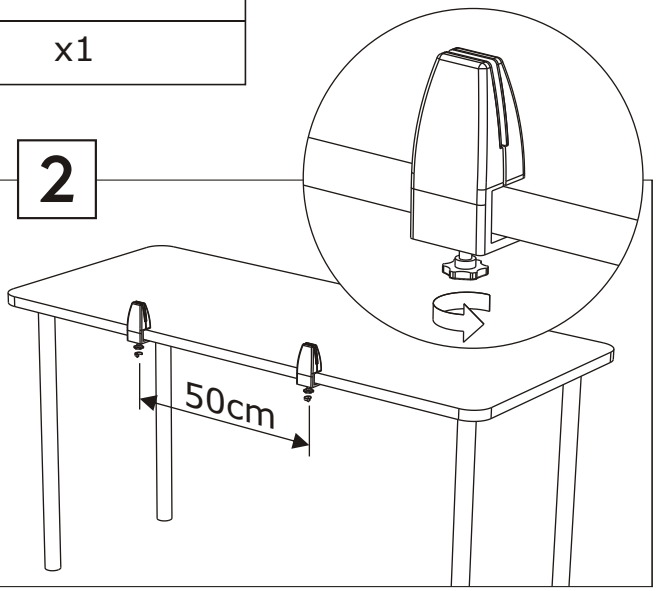

3

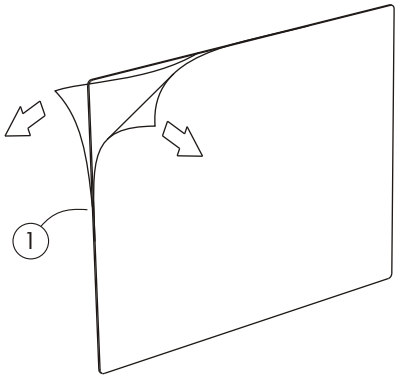

4

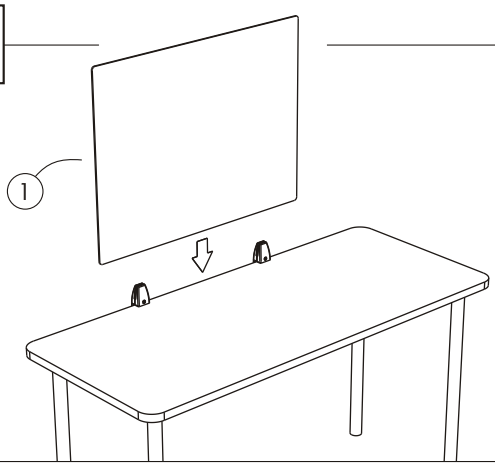
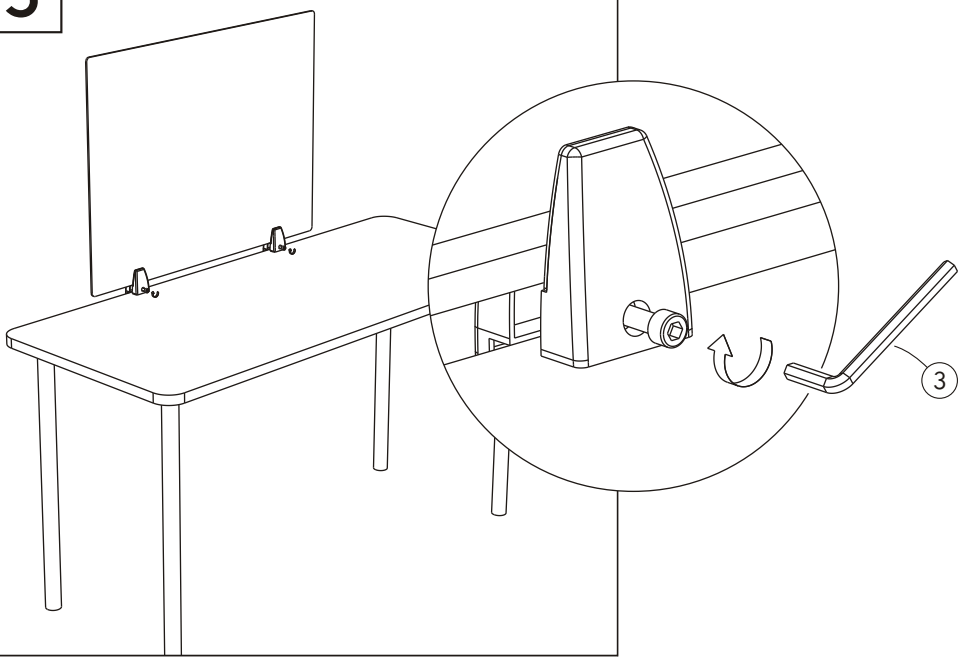
5